96" x 96" FREESTANDING IGNITER LIGHTBOX
IG96X96-TV

PLEASE REFER TO LAST PAGE OF MANUAL FOR SEG INSTRUCTIONS

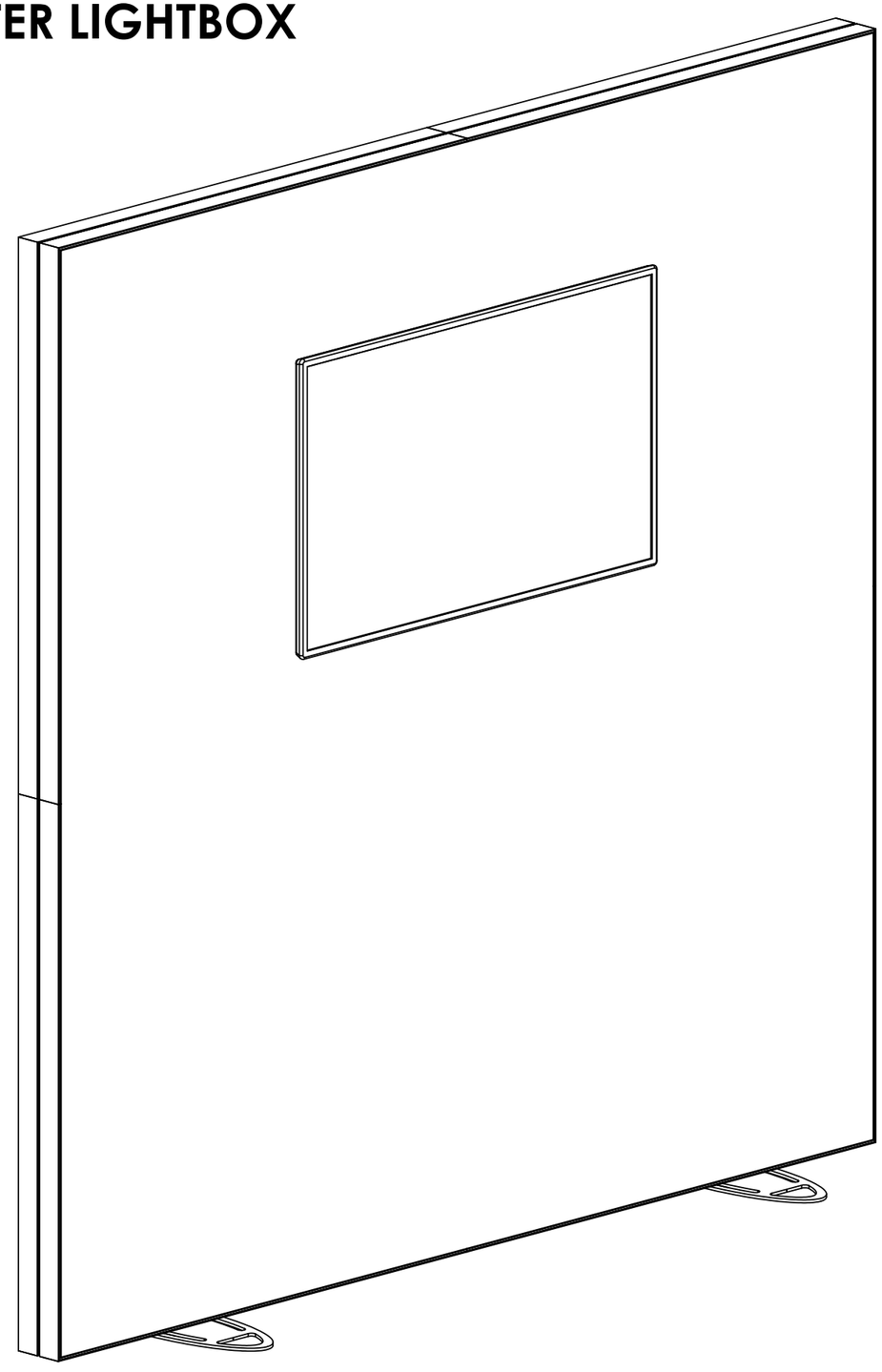

FRONT VIEW
WITH GRAPHIC & MONITOR

SET-UP MANUAL

FINISH:	THIRD ANGLE PROJECTION	- PROPRIETARY - THIS DOCUMENT AND DATA DISCLOSED HERIN OR HEREWITH IS NOT TO BE REPRODUCED, USED, OR DISCLOSED IN WHOLE OR IN PART TO ANYONE WITHOUT PERMISSION OF NIEDO GROUP, INC.
MATERIAL:	NIEDO GROUP, INC.	5465 SW WESTERN AVE. BEAVERTON, OR 97005
DIMENSIONS ARE IN MILLIMETERS	96" x 96" FREESTANDING IGNITER LIGHTBOX SETUP INSTRUCTION	
TOLERANCES UNLESS OTHERWISE SPECIFIED	SIZE B / DWG. NO.	REV -01
	SCALE: NA / DO NOT SCALE DRAWING	SHEET 1

96" x 96" FREESTANDING IGNITER LIGHTBOX
IG96X96-TV

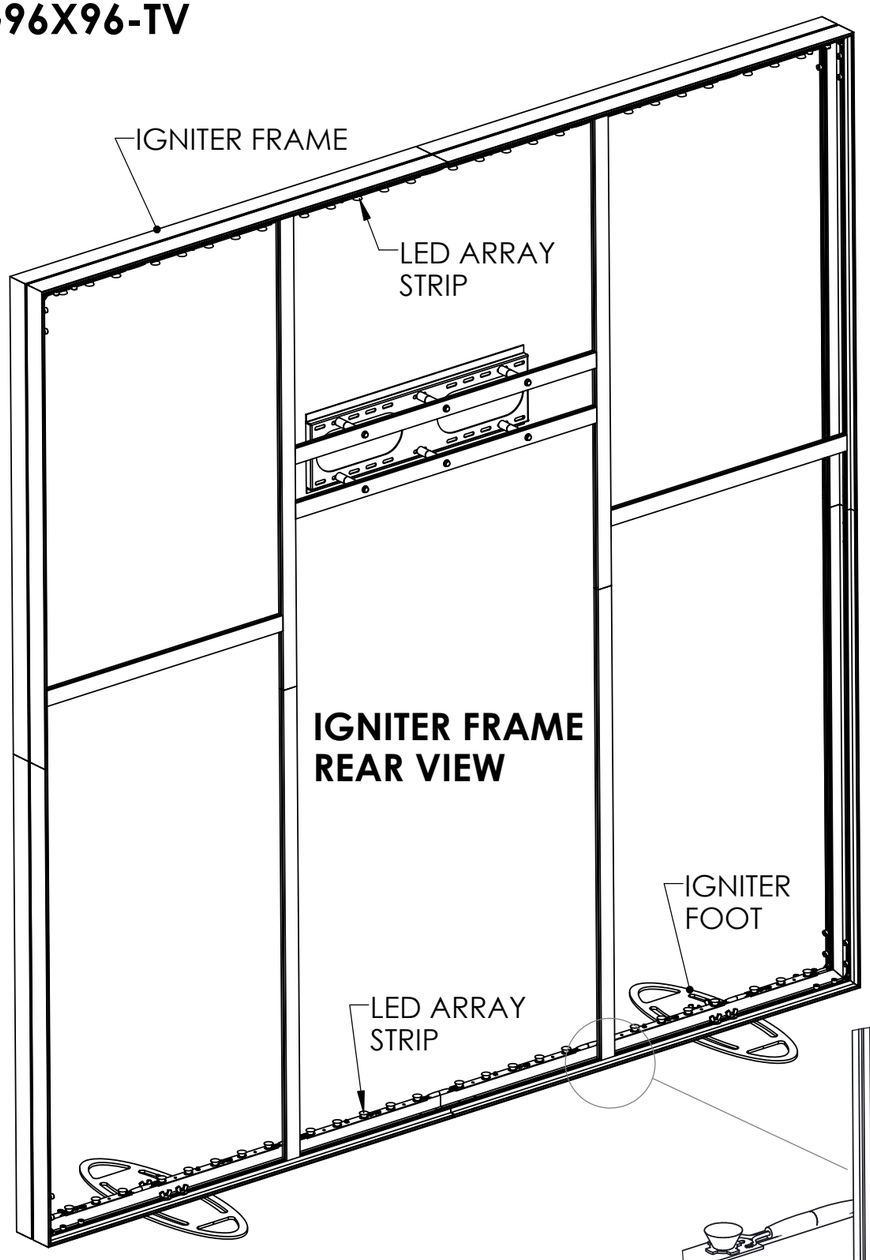

IGNITER FRAME REAR VIEW

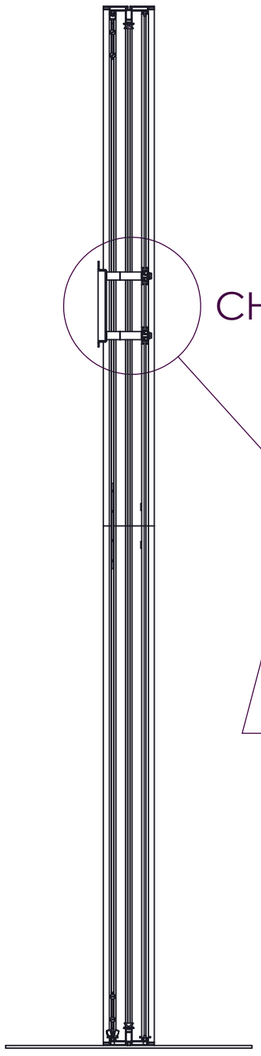

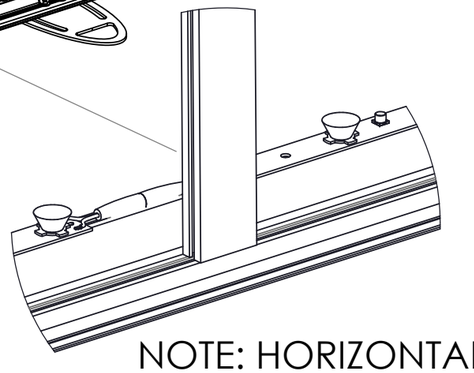

NOTE: HORIZONTAL AND VERTICAL SUPPORTS MOUNT IN **REAR** FRAME CHANNEL

GENERAL NOTES & DETAIL

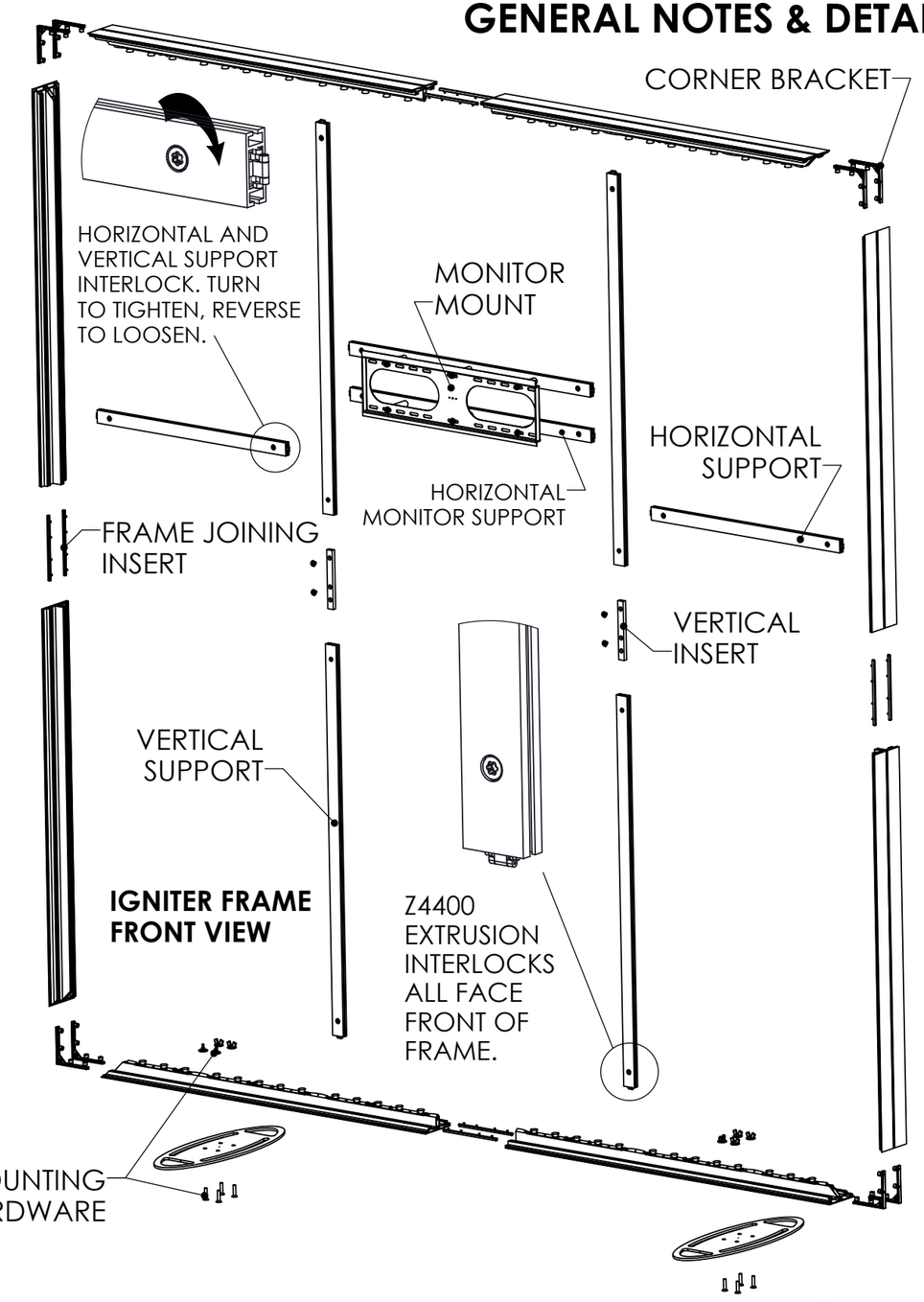

FINISH:	THIRD ANGLE PROJECTION	- PROPRIETARY - THIS DOCUMENT AND DATA DISCLOSED HERIN OR HEREWITH IS NOT TO BE REPRODUCED, USED, OR DISCLOSED IN WHOLE OR IN PART TO ANYONE WITHOUT PERMISSION OF NIEDO GROUP, INC.
MATERIAL:	NIEDO GROUP, INC.	5465 SW WESTERN AVE. BEAVERTON, OR 97005
DIMENSIONS ARE IN MILLIMETERS	96" x 96" FREESTANDING IGNITER LIGHTBOX SETUP INSTRUCTION	
TOLERANCES UNLESS OTHERWISE SPECIFIED	SIZE B / DWG. NO.	REV -01
	SCALE: NA / DO NOT SCALE DRAWING	SHEET 1

96" x 96" FREESTANDING IGNITER LIGHTBOX
IG96X96-TV

FRAME ASSEMBLY DETAILS

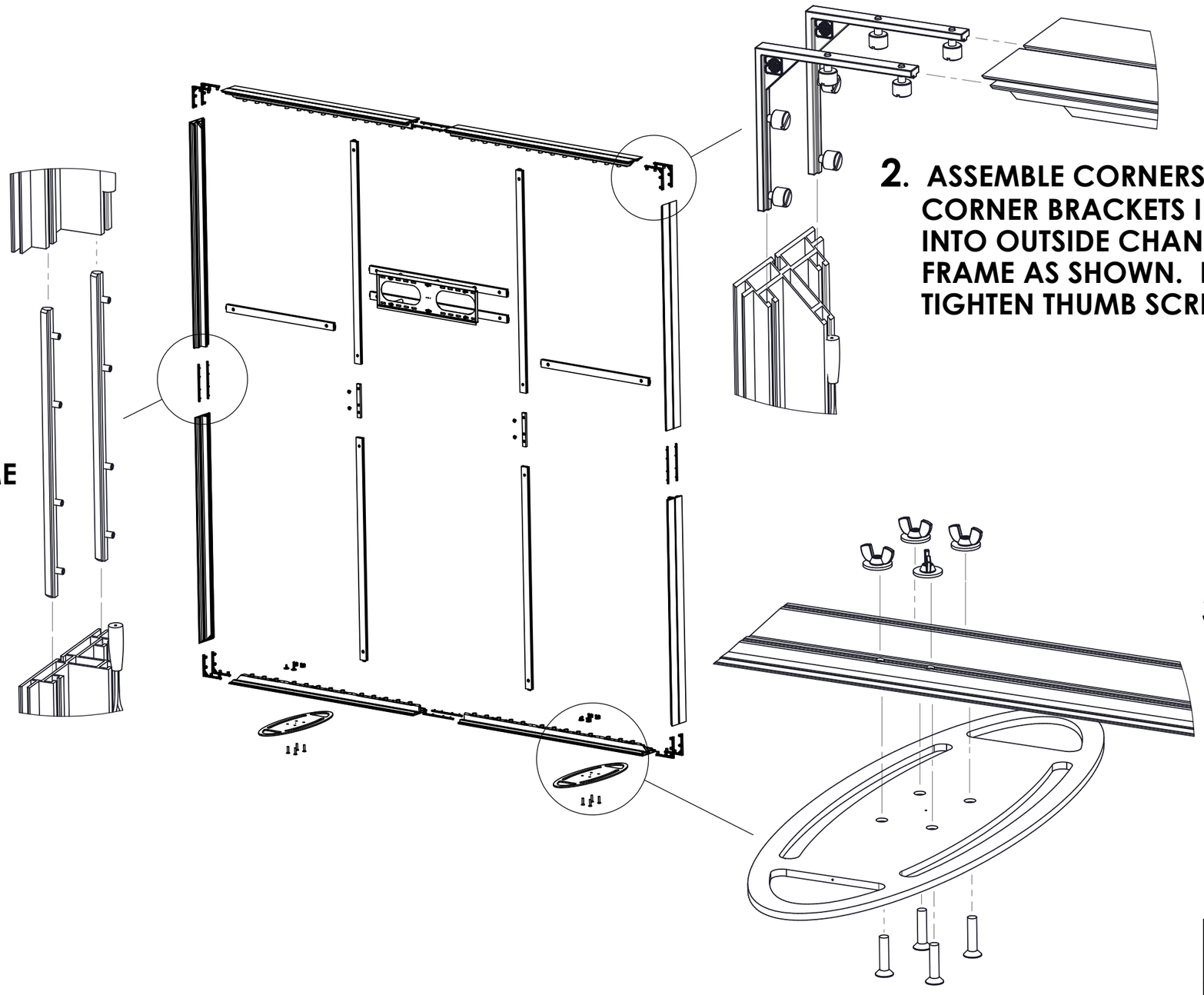

1. WITH FRAME FLAT ON THE FLOOR ASSEMBLE FRAME SIDES WITH JOINT INSERTS IN OUTSIDE CHANNELS OF FRAME AS SHOWN. TIGHTEN SETSCREWS.

2. ASSEMBLE CORNERS USING CORNER BRACKETS INSERTED INTO OUTSIDE CHANNELS OF FRAME AS SHOWN. FINGER TIGHTEN THUMB SCREWS ONLY.

3. ASSEMBLE FEET TO FRAME WITH SCREWS AND HARDWARE PROVIDED. FINGER TIGHTEN WING NUTS. STAND FRAME UP FOR MONITOR MOUNT ATTACHMENT.

FINISH:	THIRD ANGLE PROJECTION	- PROPRIETARY - THIS DOCUMENT AND DATA DISCLOSED HERIN OR HEREWITH IS NOT TO BE REPRODUCED, USED, OR DISCLOSED IN WHOLE OR IN PART TO ANYONE WITHOUT PERMISSION OF NIEDO GROUP, INC.
MATERIAL:		NIEDO GROUP, INC. 5465 SW WESTERN AVE. BEAVERTON, OR 97005
DIMENSIONS ARE IN MILLIMETERS		96" x 96" FREESTANDING IGNITER LIGHTBOX SETUP INSTRUCTION
TOLERANCES UNLESS OTHERWISE SPECIFIED	SIZE B	DWG. NO. -01
	SCALE: NA	DO NOT SCALE DRAWING SHEET 1

96" x 96" FREESTANDING IGNITER LIGHTBOX
IG96X96-TV

MONITOR MOUNT ATTACHMENT DETAIL

4. ASSEMBLE LONG VERTICAL SUPPORTS BY COUPLING THE 2 SECTIONS USING THE VERTICAL INSERT AND INCLUDED HARDWARE.

NOTE: INTERLOCK MECHANISMS ON Z4400 EXTRUSION SUPPORTS FACE FRONT FOR CONVENIENT ADJUSTMENT. SEE PAGE 2 FRONT VIEW DETAIL.

5. ASSEMBLE THE COMPLETE VERTICAL SUPPORT TO THE FRAME BY INSERTING THE TOP AND BOTTOM INTERLOCK MECHANISMS INTO THE TOP AND BOTTOM FRAME **REAR** CHANNELS.

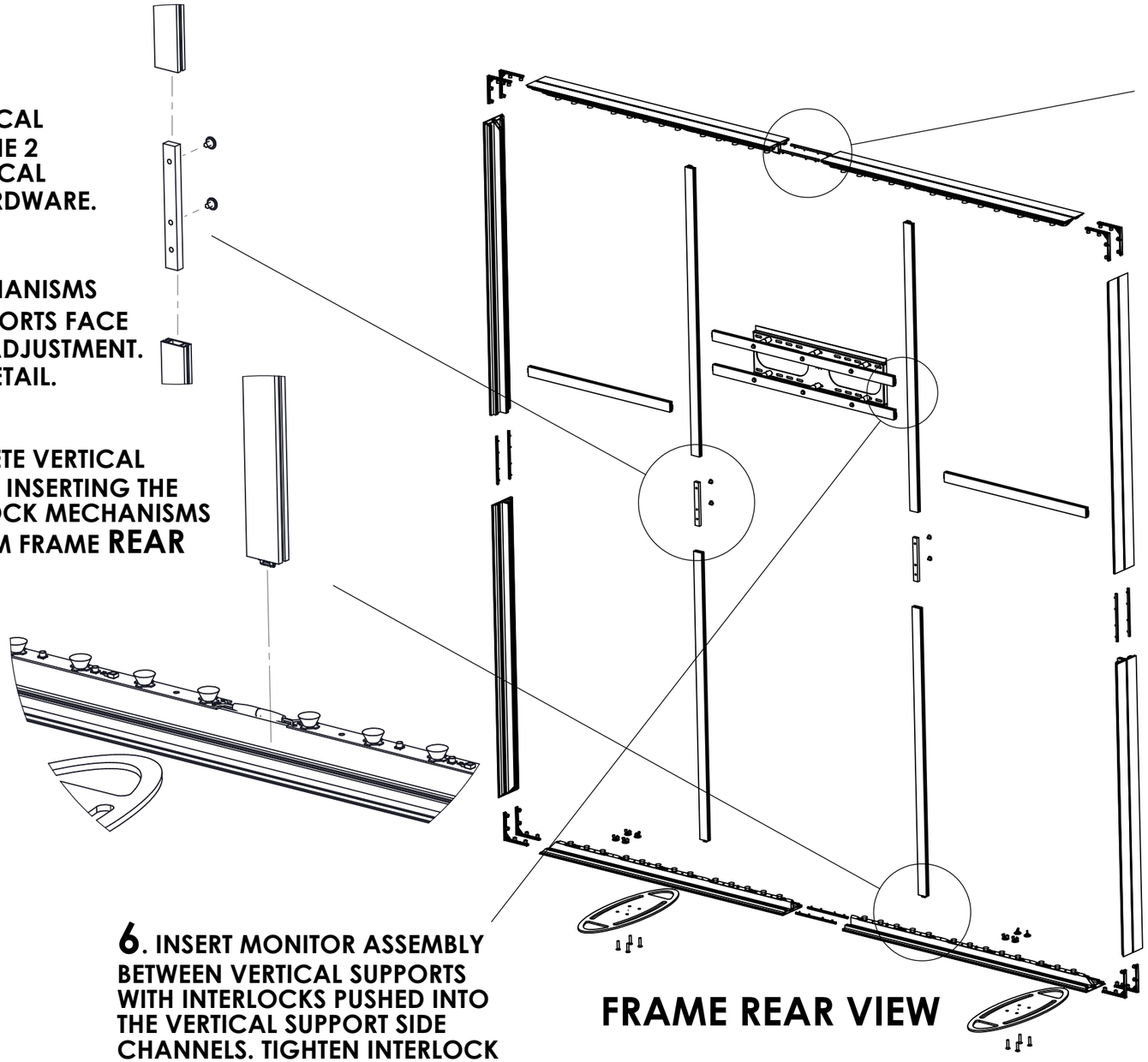

7. LOOSEN THE SETSCREWS FOR THE TOP FRAME JOINING INSERTS ENOUGH TO ALLOW THE TOP FRAME TO BE SPREAD SLIGHTLY APART.

8. ASSEMBLE HORIZONTAL SUPPORTS TO FRAME BY INSERTING INTERLOCKS INTO **REAR** CHANNEL OF FRAME

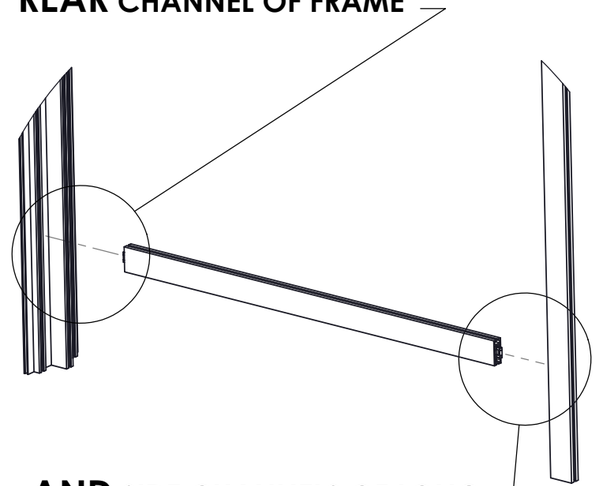

AND SIDE CHANNELS OF LONG VERTICAL SUPPORTS.

BE CERTAIN THAT ALL SET SCREWS ARE TIGHTENED AND THAT INTERLOCKS ARE FULLY ENGAGED AND SECURE.

DETAIL A

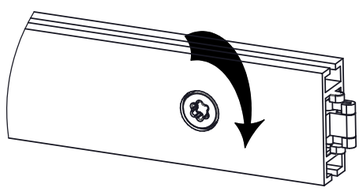

Z4400 EXTRUSION INTERLOCK. TURN TO TIGHTEN, REVERSE TO LOOSEN.

6. INSERT MONITOR ASSEMBLY BETWEEN VERTICAL SUPPORTS WITH INTERLOCKS PUSHED INTO THE VERTICAL SUPPORT SIDE CHANNELS. TIGHTEN INTERLOCK MECHANISMS AS IN DETAIL A.

FRAME REAR VIEW

FINISH:	THIRD ANGLE PROJECTION	PROPRIETARY - THIS DOCUMENT AND DATA DISCLOSED HERIN OR HEREWITH IS NOT TO BE REPRODUCED, USED, OR DISCLOSED IN WHOLE OR IN PART TO ANYONE WITHOUT PERMISSION OF NIEDO GROUP, INC.
MATERIAL:	NIEDO GROUP, INC.	5465 SW WESTERN AVE. BEAVERTON, OR 97005
DIMENSIONS ARE IN MILLIMETERS	96" x 96" FREESTANDING IGNITER LIGHTBOX SETUP INSTRUCTION	
TOLERANCES UNLESS OTHERWISE SPECIFIED	SIZE B / DWG. NO. / REV -01	
	SCALE: NA / DO NOT SCALE DRAWING	SHEET 1

96" x 96" FREESTANDING IGNITER LIGHTBOX
IG96X96-TV

LED ARRAY INTERCONNECT DETAIL

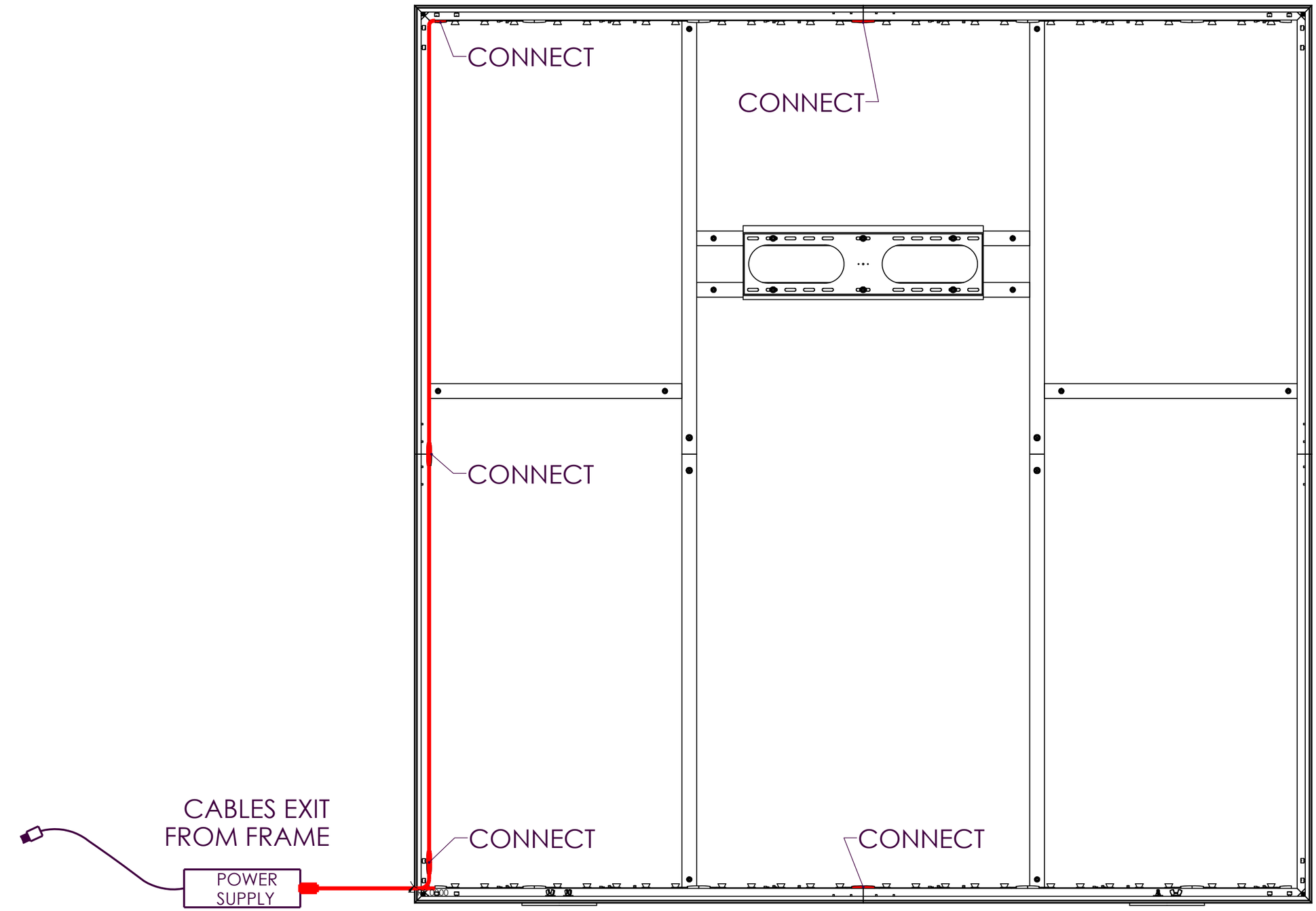

FINISH:	THIRD ANGLE PROJECTION	- PROPRIETARY - THIS DOCUMENT AND DATA DISCLOSED HERIN OR HEREWITH IS NOT TO BE REPRODUCED, USED, OR DISCLOSED IN WHOLE OR IN PART TO ANYONE WITHOUT PERMISSION OF NIEDO GROUP, INC.
MATERIAL:	NIEDO GROUP, INC.	5465 SW WESTERN AVE. BEAVERTON, OR 97005
DIMENSIONS ARE IN MILLIMETERS	96" x 96" FREESTANDING IGNITER LIGHTBOX SETUP INSTRUCTION	
TOLERANCES UNLESS OTHERWISE SPECIFIED	SIZE B / DWG. NO.	REV -01
	SCALE: NA / DO NOT SCALE DRAWING	SHEET 1

Silicone Edge Graphics (SEG)

Installation Instructions into hardware

What are Silicone Edge Graphics (SEG)?

SEG are dye-sublimation fabric graphics with silicone strips sewn along the underside of the fabrics edge. SEG frames have grooves along their perimeter designed to snugly hold the silicone strips so the fabric can be stretched across the frame for a drum-tight fit.

We recommend laying the frame on the floor, then draping the fabric graphic on top.

The following procedure ensures the silicone edge will be place evenly over the entire frame and NOT STRETCH or GROW at the corners. Once all the edges have been secured, you should have a taut fit with a smooth flat finish.

1: With Clean Hands,

Press SEG silicone edge first, into the corners of the frame.

INCORRECT WAY

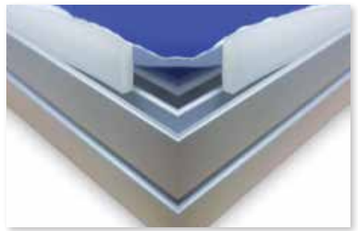

CORRECT WAY

PRESS

Example: 36"x 36" frame

2: Working in Centers.

Go back and press the silicone edge into the center - on eachside of the frame.

EXAMPLE: *A 20"x20" fabric/frame would be pressed in 8 locations.*

PRESS

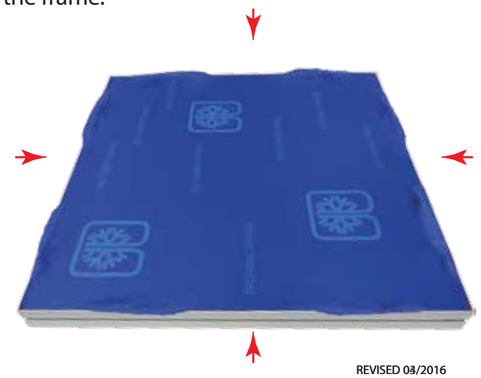

REVISED 03/2016

Cont'd.

3: Working in Centers again,

Go back and press the silicone edge once again on each side previous center, on all 4 sides.

Repeat this process, (WORKING IN CENTERS) until the SEG fabric's edge is pressed aproximately every 6 inches apart.

EXAMPLE: *A 8' x 8' frame (using this procedure) will have been pressed/tucked 15 times (not including corners) on each side of the frame.*

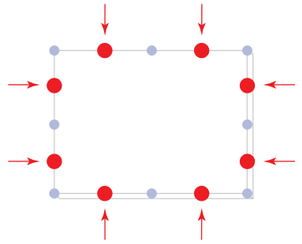

PRESS

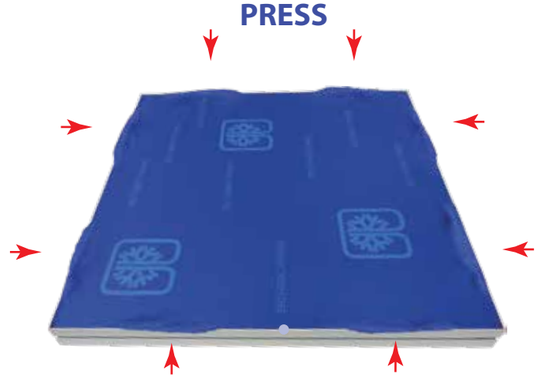

4: After all has been pressed into your frame using

this procedure, lightly tap your forefinger to smooth fabric between the tucks.

CARE INSTRUCTIONS

Due to the fine quality, smoothness and weave of the fabric, great care must be taken to extend the life of your SEG fabric graphics.

We recommend very loosely folding your graphic, making sure there are no hard creases or folds or that the fabric doesn't catch on sharp obects.

Store in a clean bag.
A plastic bag or pillow case is ideal.
Graphics can also be spot cleaned with a damp cloth.

To wash entire graphic, use a commercial size front loading washing machine on gentle cycle with cool water. Do NOT dry clean.

You can also gently iron the back side using the Polyester setting of your iron.

REVISED 04/2016